Demco manufacturing

Dethmers Manufacturing Company

DOING OUR BEST TO PROVIDE YOU THE BEST

DA10

ACTUATOR

OWNERS/OPERATORS MANUAL

ASSEMBLY
CALIBRATION
OPERATION
REPLACEMENT PARTS

READ complete manual CAREFULLY BEFORE attempting operation.

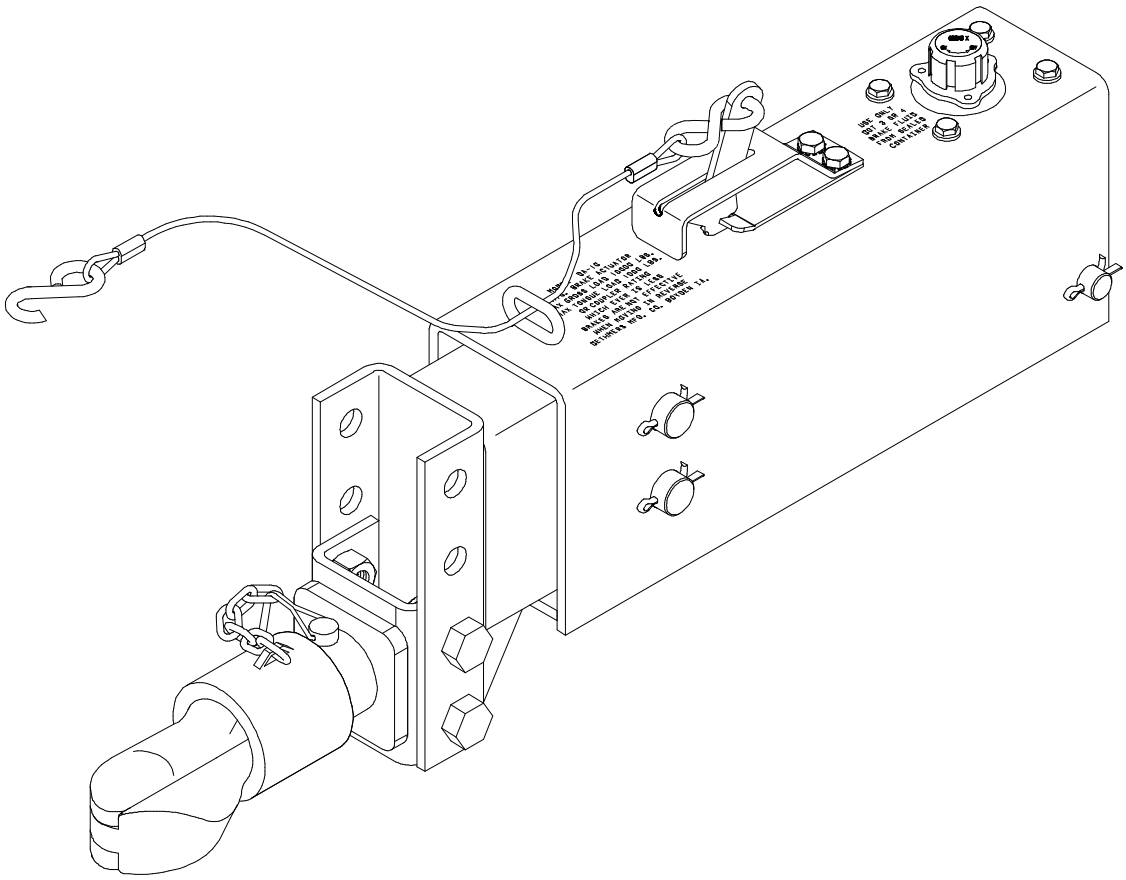

DEMCO • Dethmers Mfg. Co. • 4010 320th St. • P.O. Box 189 • Boyden, IA 51234
PH: (712) 725-2311 • Toll Free: 1-800-543-3626 • FAX: 1-800-845-6420
www.demco-products.com

MODEL DA10 ACTUATOR PARTS BREAKDOWN

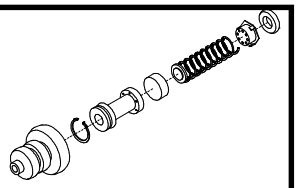

5398 Master Cylinder Repair Kit (drum)
(gasket 09153 included)

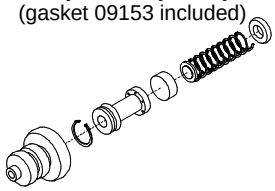

5482Master Cylinder Repair Kit (disc)
(gasket 09153 included)

5650 Master Cyl. Replacement Kit (drum)
(gasket 09153 and fasteners included)

5672 Master Cyl. Replacement Kit (disc)
(gasket 09153 and fasteners included)

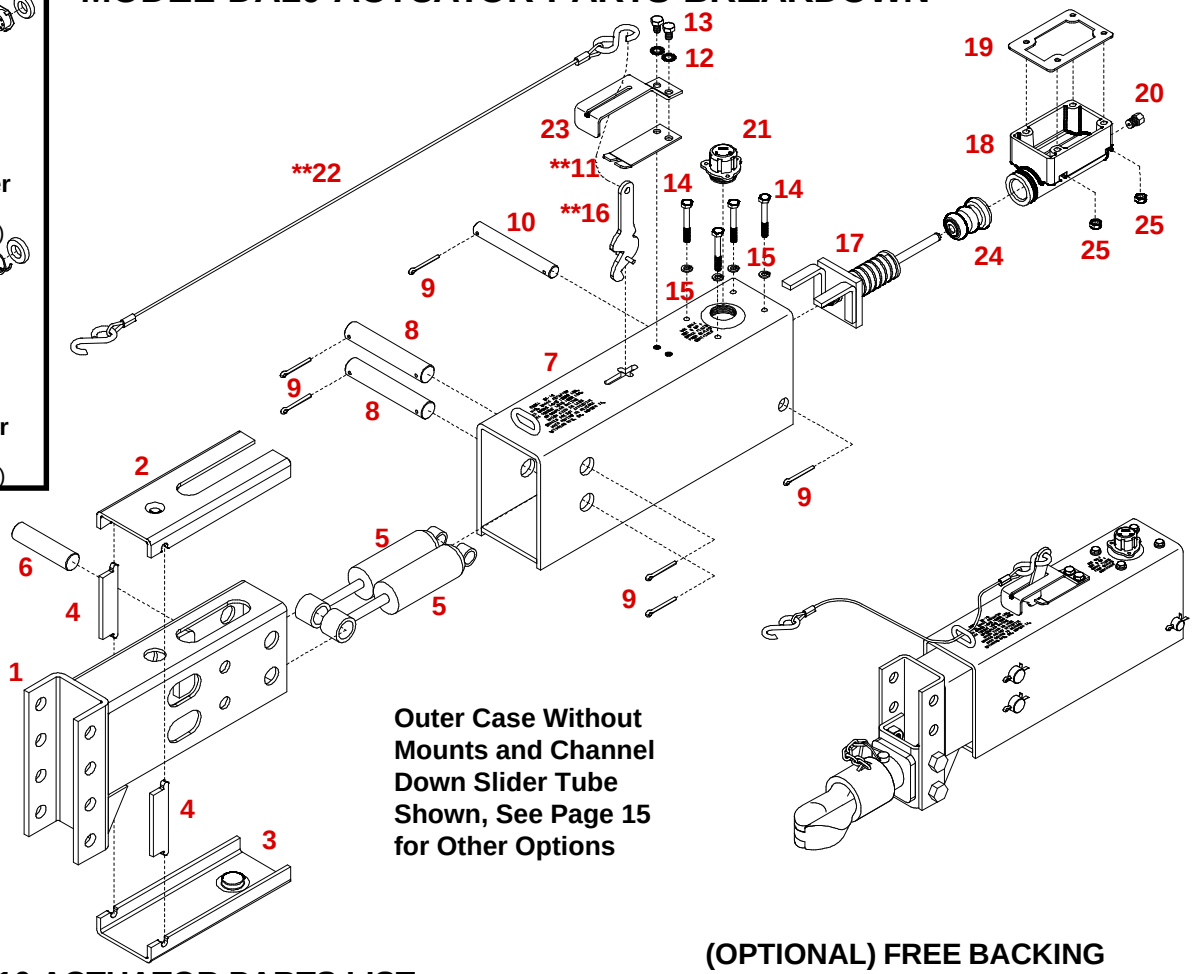

Outer Case Without Mounts and Channel Down Slider Tube Shown, See Page 15 for Other Options

Model DA10 ACTUATOR PARTS LIST

REF. NO.	PART NO.	QTY.	DESCRIPTION
1.	**11058-??**	1	Inner Slider Tube Chan. Down (Shown)
-	**11053-??**	-	Inner Slider Tube Channel Center
-	**11063-??**	-	Inner Slider Tube Channel Up
2.	**10965**	1	Top Wear Pad
3.	**10966**	1	Bottom Wear Pad
4.	**10964**	2	Spacer Block
5.	**SB12426**	2	Damper Shock
6.	**05973-95**	1	Front Shock Pin (zinc plated)
7.	**11068-??**	1	Outer Case (11068 shown see page 15 for others)
8.	**05986-95**	2	Connecting Pin (zinc plated)
9.	**02363**	6	5/32" x 1-1/4" Cotter Pin
10.	**05974-95**	1	Rear Shock Pin (zinc plated)
**11	**05693-95**	1	Emergency Lever Spring (zinc plated)
12.	**05424**	2	5/16" External Tooth Lock Washer
13.	**05961**	2	5/16"-18 UNC x 5/8" Hex Head Bolt Gr.5
14.	**00618**	4	1/4"-20 UNC x 2" Hex Head Bolt Gr.5
15.	**00057**	4	1/4" Lock Washer
**16	**05951**	1	Emergency Lever (zinc plated)
17.	**05989**	1	Push Rod Assembly
18.	**10616**	1	Composite Master Cylinder (drum brakes)
-	**11190**	1	Composite Master Cylinder (disc brakes)
19.	**09153**	-	Replacement Master Cyl. Gasket ONLY
20.	**SB12098**	1	1/8" pipe - 3/16" Fitting w/ Orifice (drum)
-	**05679**	1	1/8" pipe - 3/16" Inverted Flare Fitting (disc)
21.	**03876**	1	Master Cylinder Cap w/ Diaphragm and O-Ring
-	**05849**	-	O-Ring (replacement)
**22	**05408**	1	3/32" Cable with hooks (both ends)
-	**SB10555**	-	Replacement S-hooks ONLY
23.	**03866-95**	1	Lever Guide (zinc plated)
-	**BH21003**	-	Replacement Towable/Not Towable Decal
24.	**05687**	1	Master Cyl. Protective Boot
25.	**00062**	4	1/4"-20 UNC Hex Nuts
-	**5401**	-	Lever Replacement Kit (incl. items w/**)

(OPTIONAL) FREE BACKING SOLENOID KIT PARTS BREAKDOWN 5404 (FIELD INSTALL) 5629 (FACTORY INSTALL)

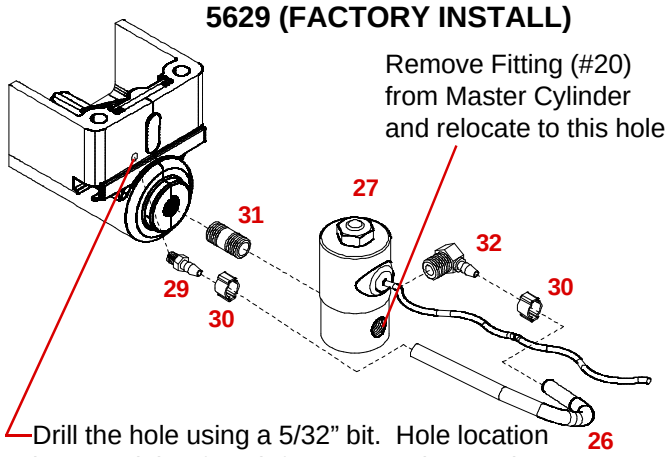

Drill the hole using a 5/32" bit. Hole location is .900" right of top left corner and .900" down from top of master cylinder. Tap hole with 10-32 NF tap

KIT #5404 PARTS LIST

REF. NO.	PART NO.	QTY.	DESCRIPTION
26.	**04594**	-	EPDM Black Tubing
27.	**05561**	1	Solenoid Valve
28.	**09153**	1	Master Cylinder Gasket (not shown)
29.	**10373**	1	Brass Fitting Str. .2 HB x 10-32 NF
30.	**10374**	2	Crimp Clamp
31.	**10375**	1	Straight Nipple 1/8" MPT x 1/8" MPT
32.	**10376**	1	Brass Elbow 1/8" MPT x .2 HB

Note: -?? = **-95** Plated **-97** Primed Red
Indicate color when ordering parts

Please order replacement parts by **PART NO.** and **DESCRIPTION**

OUTER CASE OPTIONS AND AVAILABLE HITCH CONFIGURATIONS

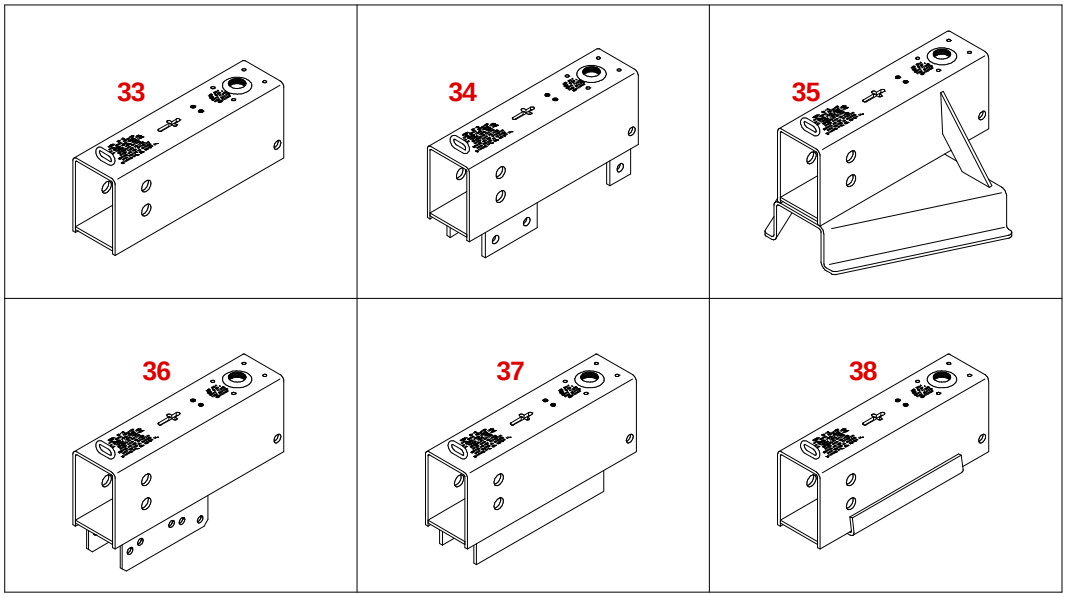

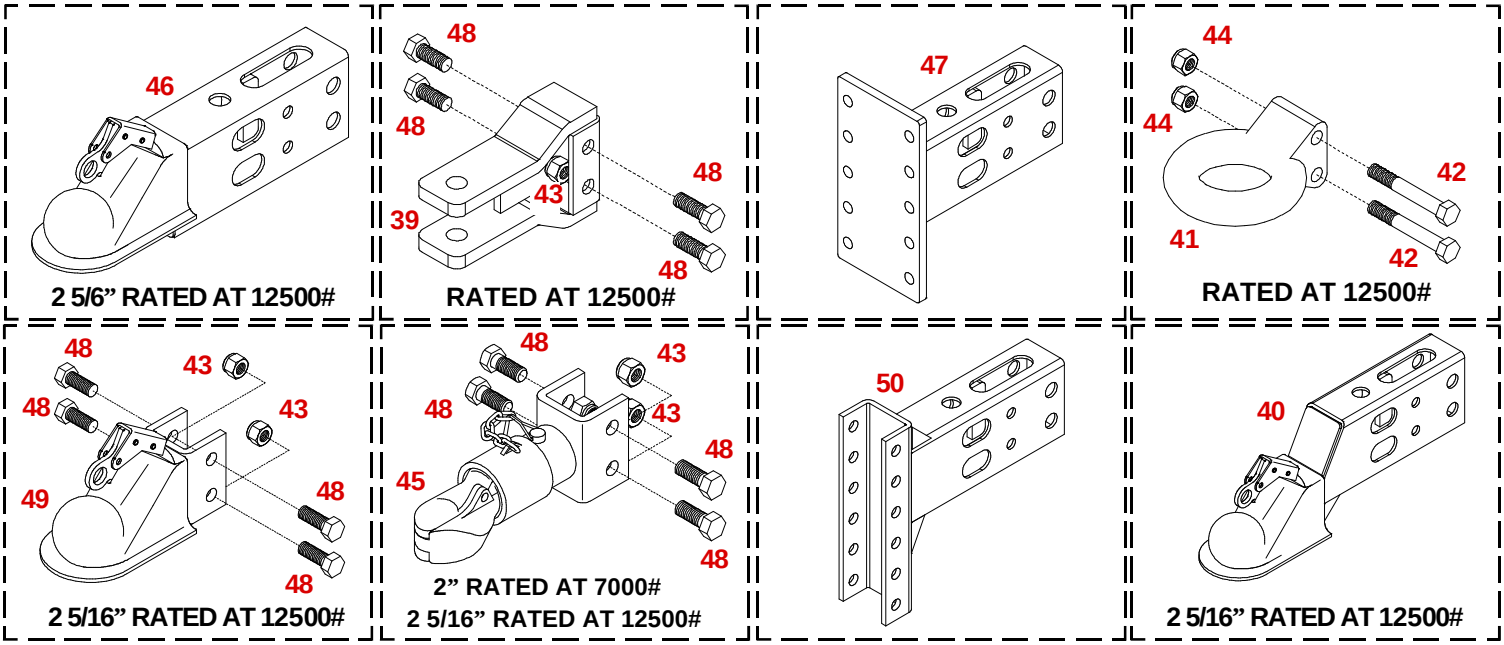

WARNING: TO AVOID PERSONAL INJURY OR PROPERTY DAMAGE, OBSERVE THE FOLLOWING INSTRUCTIONS:

The weight rating of the coupler is dependent on the correct bolts being used. You must use the bolts provided with the product. If you are missing bolts, refer to your Operator's Manual and obtain replacements from Demco, or use the exact size, grade, and number of bolts as specified. Using the wrong size, grade, or number of bolts will reduce the weight rating of the coupler and could cause separation of your towing equipment from the towing vehicle. If you have questions about the correct bolts for your application call Demco at any of the following telephone numbers:

(712) 725-2311
(712) 725-2302
1-800-543-3626
FAX: 1-800-845-6420

	DA10		OPTIONS
33.	**11068-97**	1	Outer Case w/ no mounts (primed red)
34.	**11082-??**	1	Outer Case w/ 6 hole mount
35.	**11088-97**	1	Outer Case w/ 50° mount (primed red)
36.	**11084-??**	1	Outer Case w/ universal mount
37.	**11085-97**	1	Outer Case w/ channel mount (primed red)
38.	**11086-97**	1	Outer Case w/ angle mounts (primed red)
39.	**05593-??**	1	10,000 lb. Clevis
40.	**11064-??**	1	2-5/16" Lever Lock Coupler Slider Tube (drop)
41.	**09557-??**	1	Pintle Ring (6 Ton Capacity)
42.	**02434**	2	5/8"-11UNC x 4 1/2" Hex Head Bolt Gr.5
43.	**03730**	4	5/8"-11UNC Stover Lock Nut
44.	**02587**	2	5/8"-11UNC Nylon Insert Lock Nut
45.	**05823-??**	1	2" Bulldog Coupler Welded to Clevis Channel
-	**05557-??**	1	2-5/16" Bulldog Coupler Welded to Clevis Channel
46.	**11059-??**	1	2-5/16" Lever Lock Coupler Slider Tube (straight)
47.	**11052-??**	1	Inner Slide Tube w/ Flat Plate
48.	**04051**	4	5/8"-11 UNC x 1-1/2" Hex Head Bolt Gr.5
49.	**07678-??**	1	2-5/16" Lever Lock Coupler
50.	**11060-??**	1	12" Channel Down Inner Slider Tube

Note: -?? = **-95** Plated **-97** Primed Red
Indicate color when ordering parts

Please order replacement parts by PART NO. and DESCRIPTION and COLOR.

DEMCO MODEL DA10 BRAKE ACTUATOR

WARNING To Prevent Serious Injury Or Death:

- **Review all of the following instructions before installation and use of hydraulic brake actuator.**
- **Dealers or Distributors must review these instructions with ultimate user.**
- **Failure to follow these instructions, or failure to properly maintain braking system after installation, can result in loss of braking action which could cause severe property damage, personal injury or death.**

Model DA10 brake actuator has a maximum load rating of 12,500 lbs. GVWR and 1,000 lbs. tongue load.

WARNING To avoid personal injury or death, do not exceed lowest of (1) the rated capacity of Model DA10 actuator, or (2) rated capacity of ball, hitch, and coupler being used, or (3) trailer's Gross Vehicle Weight Rating (GVWR).

Model DA10 brake actuator has a maximum tongue load equal to 10% of the maximum load rating.

INSTALLATION

Model DA10 is completely assembled and ready to bolt or weld into place.

1. DA10 actuators come with a variety of mounting channels. (see Page 15)
2. Connect and tighten all brake lines.
3. Fill master cylinder (#18) with DOT 3 or 4 brake fluid.
4. Bleed brake system using a pressure-type brake bleeder or manually, as follows:

   a. Remove two 5/16" hex head bolts (#13) and lock washers (#12) that hold lever guide (#23) and flat emergency lever spring (#11). Remove lever guide and emergency lever spring. Using short strokes, pull forward on emergency lever (#16), pumping master cylinder until brake fluid within master cylinder stops bubbling.

   b. Attach a bleeder hose to bleeder valve on one of the wheels and submerge other end of hose into a transparent container partially filled with brake fluid. Loosen bleeder valve one turn and, watching hose in transparent container, use emergency lever to pump master cylinder as long as air bubbles continue to leave the hose. When bubbles stop, close bleeder valve, move to next wheel, and repeat process until all brakes have been bled. (Note: Check fluid level in master cylinder frequently while bleeding brakes (every 4 or 5 strokes). Refill as necessary to keep level above half full.)

5. Once bleeding is completed, refill master cylinder and attach cap (#21) securely. Replace emergency lever spring, lever guide, lock washers and 5/16" hex head bolts.

6. Test brakes by pulling emergency lever (#16) forward until it locks into its second notch position. (Lever should be approximately straight up.) Attempt to rotate wheels in a forward direction. If any wheels rotate, brakes must be adjusted. To adjust brakes, release emergency lever from locked position, set each wheels brake adjustment up 2 or 3 notches (per instructions in appropriate brake cluster manual). Repeat test procedure as necessary.

MAINTENANCE

1. Frequently check brake fluid level. (Fluid must be approved, clean and uncontaminated.)

2. Make sure actuator mounting bolts are secure.

3. Inspect actuator, replace bent, worn or damaged parts.

4. Be constantly aware of systems braking quality, make periodic checks as described in brakes owners manual. Consult certified brake specialist to make necessary adjustments or repairs. Failure to do so could result in loss of braking.

SERVICING THE EMERGENCY LEVER

If emergency lever (#16) of actuator is applied, it can be disengaged by using a screwdriver to lift upward on front of flat emergency lever spring (#11) while pulling lever forward until released. A thorough inspection of emergency lever, emergency lever spring, and cable with S-hooks is required. Damaged parts must be replaced as follows:

A. Remove Cable S-hook (#22) from emergency lever (#16), emergency lever guide (#23) and flat emergency lever spring (#11), then pull lever out of actuator outer case (#7) through cross-slot in top.

B. Install new emergency lever through cross-slot in top of outer case. Attach new emergency lever spring and emergency lever guide.

C. Insert S-hook on emergency cable (#22) into hole in emergency lever(#16) and squeeze shut.

D. Add adequate brake fluid to master cylinder and bleed brake system per instructions 4-6 in installation section.

DEMCO BRAKE PRODUCTS - LIMITED WARRANTY

1. Extent and Duration of this Warranty:

Your Demco brake product is warranted to be free from defects in materials and workmanship under normal use and service for a period of one year after date of purchase by original owner when properly installed, used and maintained by purchaser.

When this Demco brake product is used as part of complete Demco braking system (actuators, brake lines, and back plates), Demco warrants system to be free from defects in materials and workmanship for two years when properly installed, used, and maintained by purchaser.

Any part of Demco brake system found to be defective in materials or workmanship will be repaired or replaced at manufacturers option without charge for parts or labor to original owner.

2. Manufacturer and Warrantor of Trailer:

Dethmers Manufacturing Co.
4010 320th Street
P.O. Box 189
Boyden, IA 51234
(712) 725-2311

3. Repair or Replacement Procedure:

If your Demco brake product develops a defect during warranty period, promptly notify Dethmers Manufacturing Co. customer service department. Until such notice is received, warrantor will not be responsible for any repair or replacement.

Upon receipt of timely notice from you, warrantor will have a choice of options in replacing any part it determines to be defective:

a) Warrantor may require you at your own expense to deliver or ship part to its factory or authorized dealer. Any defective part will be repaired or replaced and returned to you or your authorized dealer free of charge. Any part returned to warrantor and found not to be defective will be returned to you freight collect with explanation.

b) Warrantor may ship a new part to dealer to be exchanged free of charge for defective part returned by you.

c) Warrantor may ship or deliver a replacement part to you at your address.

4. Limitations on Warranty Coverage:

Coverage under this warranty will be effective only when a copy of original invoice, showing date and location of purchase, accompanies any claim for warranty.

Warrantor has no liability whatsoever and this warranty is null and void if any Demco brake product has been misassembled or subjected to damage or neglect, negligence, misuse, accident or operated in any way contrary to operating and maintenance instructions as specified in Demco owners manual for that product.

This warranty does not cover any product that has been altered or modified so as to affect the product's operation, performance or durability, or that has been modified to change intended use of product.

In addition, warranty does not extend to repairs made necessary by abnormal use, damage, unreasonable use including failure to provide reasonable and necessary maintenance, or by use of parts, accessories or other equipment which are incompatible with Demco brake products or affect its operation, performance or durability.

This warranty does not cover:

a) normal wear and tear.
b) road film or gravel damage to paint.
c) paint.
d) rust damage.
e) any Demco brake product that has been loaded in excess of load capacity stated on identification label.
f) Accessory parts, materials or components.

Warrantor has a policy of continuous product improvement. We reserve the right to change or improve design of any Demco brake product, including but not limited to state of the art changes, without assuming any obligation to modify any product previously manufactured.

Warrantor assumes no responsibility to owner for loss of use of product, loss of time, inconve nience or other damage consequential or otherwise, including, but not limited to expense for gasoline, expense of transporting product to dealer and expense of returning product, mechanics travel time, telephone, telegram, fax, overnight delivery, or postage charges, road service/towing charges, rental during time warranty repairs are being performed, travel, lodging, loss or damage to personal property or loss of revenue or earnings.

5. **Limitations of Implied Warranties:**
All implied warranties, if any, expire and terminate upon expiration of this warranty. Some states do not allow
limitation on how long an implied warranty lasts, so this limitation may not apply to you.

6. **Limitation of Consequential Damages:**
Warrantor's responsibility under this warranty extends solely to repair or replacement of your Demco brake product and its component parts. Warrantor does not assume responsibility for, nor shall it be liable for, any special, incidental or consequential damages. Some states do not allow exclusion or limitation of incidental or consequential damages, so above exclusion or limitation may not apply to you.

7. **Purchasers Rights:**
This warranty gives you specific legal rights, and you may also have other rights which vary from state to state.

8. **Exclusive Warranty:**
This is the only express warranty made by Dethmers Manufacturing Co. on your Demco product and no agent, employee, or other person is allowed to change or add to this warranty.This war ranty extends solely to repair or replacement of your Demco brake product and its component parts. Warrantor does not assume any liability or responsibility not expressly covered by this limited warranty.This warranty supersedes all prior warranties, written or implied.

DISCLAIMER

No other express warranty has been made or will be made on behalf of warrantor with respect to Demco brake product or its instruction, operation, repair or replacement.Warrantor shall not be responsible for damage, loss or damage to personal property, whether direct or indirect, and whether arising in contract or tort.

DETHMERS MFG. COMPANY
P.O. BOX 189
4010 320th St., BOYDEN, IA. 51234
PH: (712) 725-2311 FAX: (712) 725-2380
TOLL FREE: 1-800-54DEMCO (1-800-543-3626)
www.demco-products.com